M2000 2-BOLT PILLOW BLOCK

SHAFT SIZE	PART #		DIMENSIONS (INCHES)													WEIGHT LBS.
	EXP	NON-EXP	A	B	C	MIN D	CENTER TO CENTER D	MAX D	F	G	H	J	L	M	N	
1 3/16 1 1/4 1 7/16 1 1/2	19121103 19121104 19121107 19121108	19221103 19221104 19221107 19221108	2 7/8	6 7/8	2 3/16	4 11/16	5	5 5/16	1/2	15/16	1 3/16	3 7/8	2 1/2	1 7/8	2 3/4	6.5 6.5 6.9 6.9
1 11/16 1 3/4 40mm 45mm	19121111 19121112 19121040 19121045	19221111 19221112 19221040 19221045	3	7 3/8	2 3/16	5 3/16	5 1/2	5 13/16	1/2	15/16	1 5/16	4 1/4	2 5/8	2 1/8	2 7/8	8.1
1 15/16 2 50mm	19121115 19121200 19121050	19221115 19221200 19221050	3	8 3/8	2 3/16	5 15/16	6 1/4	6 9/16	5/8	1	1 3/8	4 9/16	2 7/8	2 1/4	2 7/8	9.1
2 3/16 2 1/4 55mm	19121203 19121204 19121055	19221203 19221204 19221055	3 1/4	8 7/8	2 1/2	6 7/16	6 3/4	7 1/16	5/8	1	1 5/8	5	3 1/4	2 1/2	3 1/8	11.8
2 7/16 2 1/2 60mm 65mm	19121207 19121208 19121060 19121065	19221207 19221208 19221060 19221065	3 1/2	9 1/4	2 3/4	6 13/16	7 1/8	7 7/16	5/8	1	1 3/4	5 11/16	4	2 3/4	3 3/8	16.2
2 11/16 2 3/4 2 15/16 3 70mm 75mm	19121211 19121212 19121215 19121300 19121070 19121075	19221211 19221212 19221215 19221300 19221070 19221075	3 13/16	10 1/2	2 13/16	7 13/16	8 1/8	8 7/16	3/4	1 1/8	2 1/4	6 7/16	4 3/8	3 1/4	3 5/8	22.1
3 3/16 3 7/16 3 1/2 80mm 85mm 90mm	19121303 19121307 19121308 19121080 19121085 19121090	19221303 19221307 19221308 19221080 19221085 19221090	4 1/4	13	3 1/4	9 1/2	10	10 1/2	7/8	1 7/16	2 1/4	7 1/2	5 1/8	3 3/4	4 1/32	31.6
3 11/16 3 15/16 4 100mm	19121311 19121315 19121400 19121100	19221311 19221315 19221400 19221100	4 3/4	14 1/2	3 9/16	10	10 7/8	11 3/4	1	1 15/16	2 1/2	8 3/8	6	4 1/8	4 19/32	45
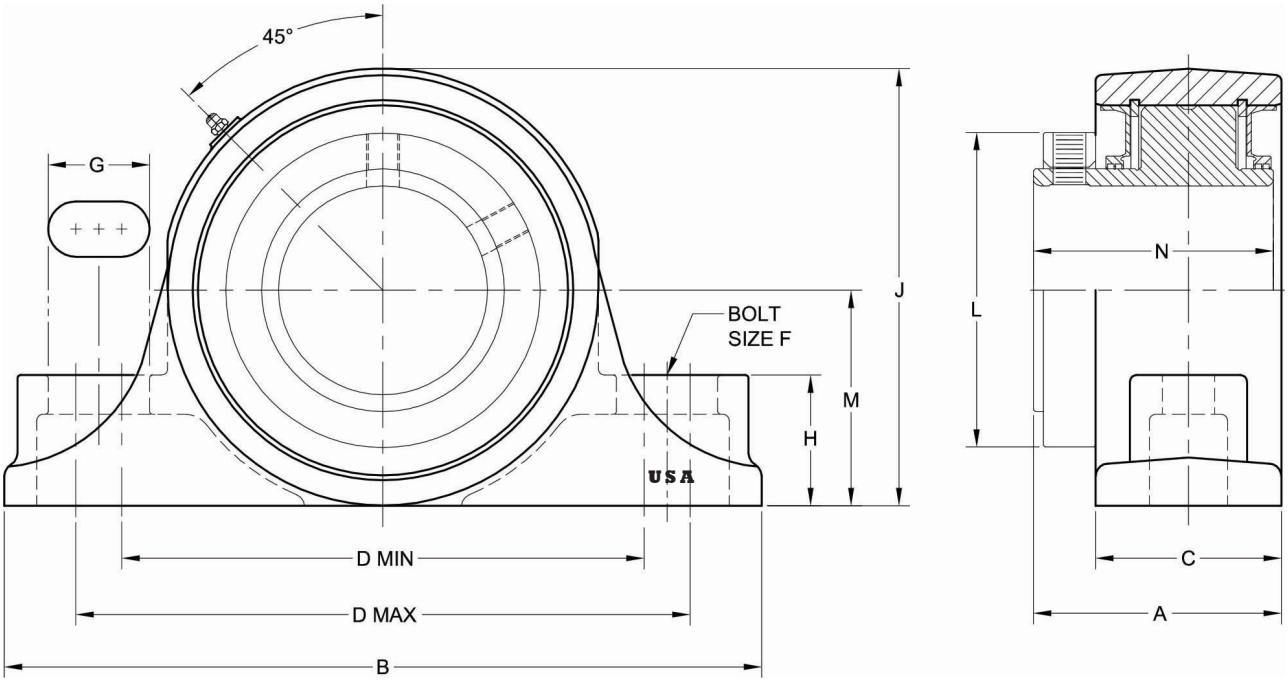
M2000 2-BOLT PILLOW BLOCK