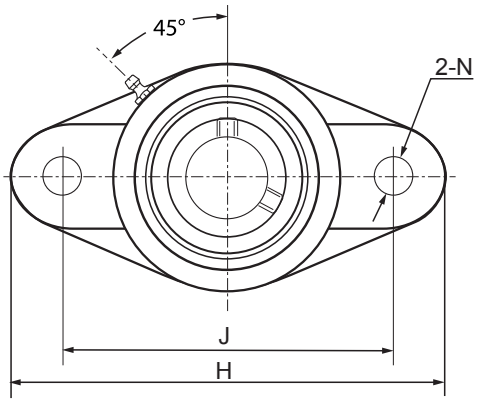

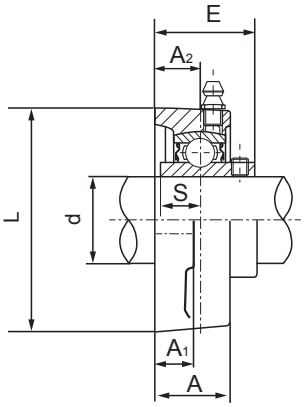

Unit No.	Shaft Diameter in.	Shaft Diameter mm	Dimensions (in.) (mm) H	J	L	A2	A1	A	N	E	S	Bolt Used (in.) (mm)	Bearing No.	Housing No.	Weight lbs
UCFL201-08 UCFL202 UCFL202-10 UCFL203	½ ⅝	15 17	3.8976 99	3.0118 76.5	2.2441 57	0.5906 15	0.4331 11	1.0039 25.5	0.3937 10	1.2165 30.9	0.4528 11.5	3/8 10	UC201-08 UC202 UC202-10 UC203	FL203	.85
UCFL204-08 UCFL204-10 UCFL204-12 UCFL204	½ ⅝ ¾	20	4.4488 113	3.5433 90	2.3622 60	0.5906 15	0.4528 11.5	1.0039 25.5	0.3937 10	1.3110 33.3	0.5000 12.7	3/8 10	UC204-08 UC204-10 UC204-12 UC204	FL204	1.00
UCFL205-14 UCFL205-15 UCFL205 UCFL205-16	⅞ 15/16 1	25	5.1181 130	3.8976 99	2.6772 68	0.6299 16	0.5118 13	1.0630 27	0.4528 11.5	1.4094 35.8	0.5630 14.3	7/16 11	UC205-14 UC205-15 UC205 UC205-16	FL205	1.35
UCFL206-17 UCFL206-18 UCFL206 UCFL206-19 UCFL206-20	1 1/16 1 ⅛ 1 3/16 1 ¼	30	5.8268 148	4.6063 117	3.1496 80	0.7087 18	0.5118 13	1.2205 31	0.4528 11.5	1.5827 40.2	0.6260 15.9	7/16 11	UC206-17 UC206-18 UC206 UC206-19 UC206-20	FL206	1.90
UCFL207-20 UCFL207-21 UCFL207-22 UCFL207 UCFL207-23	1 ¼ 1 5/16 1 ⅜ 1 7/16	35	6.3386 161	5.1181 130	3.5433 90	0.7480 19	0.5906 15	1.3386 34	0.5118 13	1.7480 44.4	0.6890 17.5	1/2 12	UC207-20 UC207-21 UC207-22 UC207 UC207-23	FL207	2.60
UCFL208-24 UCFL208-25 UCFL208	1 ½ 1 9/16	40	6.8898 175	5.6693 144	3.9370 100	0.8268 21	0.5906 15	1.4173 36	0.5118 13	2.0157 51.2	0.7480 19	1/2 12	UC208-24 UC208-25 UC208	FL208	3.40
UCFL209-26 UCFL209-27 UCFL209-28 UCFL209	1 ⅝ 1 11/16 1 ¾	45	7.4016 188	5.8268 148	4.2520 108	0.8661 22	0.6299 16	1.4961 38	0.5906 15	2.0551 52.2	0.7480 19	9/16 14	UC209-26 UC209-27 UC209-28 UC209	FL209	4.00
UCFL210-30 UCFL210-31 UCFL210 UCFL210-32	1 ⅞ 1 15/16 2	50	7.7559 197	6.1811 157	4.5276 115	0.8661 22	0.6299 16	1.5748 40	0.5906 15	2.1496 54.6	0.7480 19	9/16 14	UC210-30 UC210-31 UC210 UC210-32	FL210	4.50
UCFL211-32 UCFL211-34 UCFL211 UCFL211-35	2 2 ⅛ 2 3/16	55	8.8189 224	7.2441 184	5.1181 130	0.9842 25	0.7087 18	1.6929 43	0.6496 16.5	2.2992 58.4	0.8740 22.2	5/8 16	UC211-32 UC211-34 UC211 UC211-35	FL211	6.80
UCFL212-36 UCFL212 UCFL212-38 UCFL212-39	2 ¼ 2 ⅜ 2 7/16	60	9.8425 250	7.9528 202	5.5118 140	1.1417 29	0.7087 18	1.8898 48	0.6496 16.5	2.7047 68.7	1.0000 25.4	5/8 16	UC212-36 UC212 UC212-38 UC212-39	FL212	8.10
UCFL215-47 UCFL215 UCFL215-48	2 15/16 3	75	10.8268 275	8.8583 225	6.4961 165	1.3386 34	0.8661 22	2.2047 56	0.7480 19	3.0906 78.5	1.3110 33.3	5/8 16	UC215-47 UC215 UC215-48	FL215	12.35